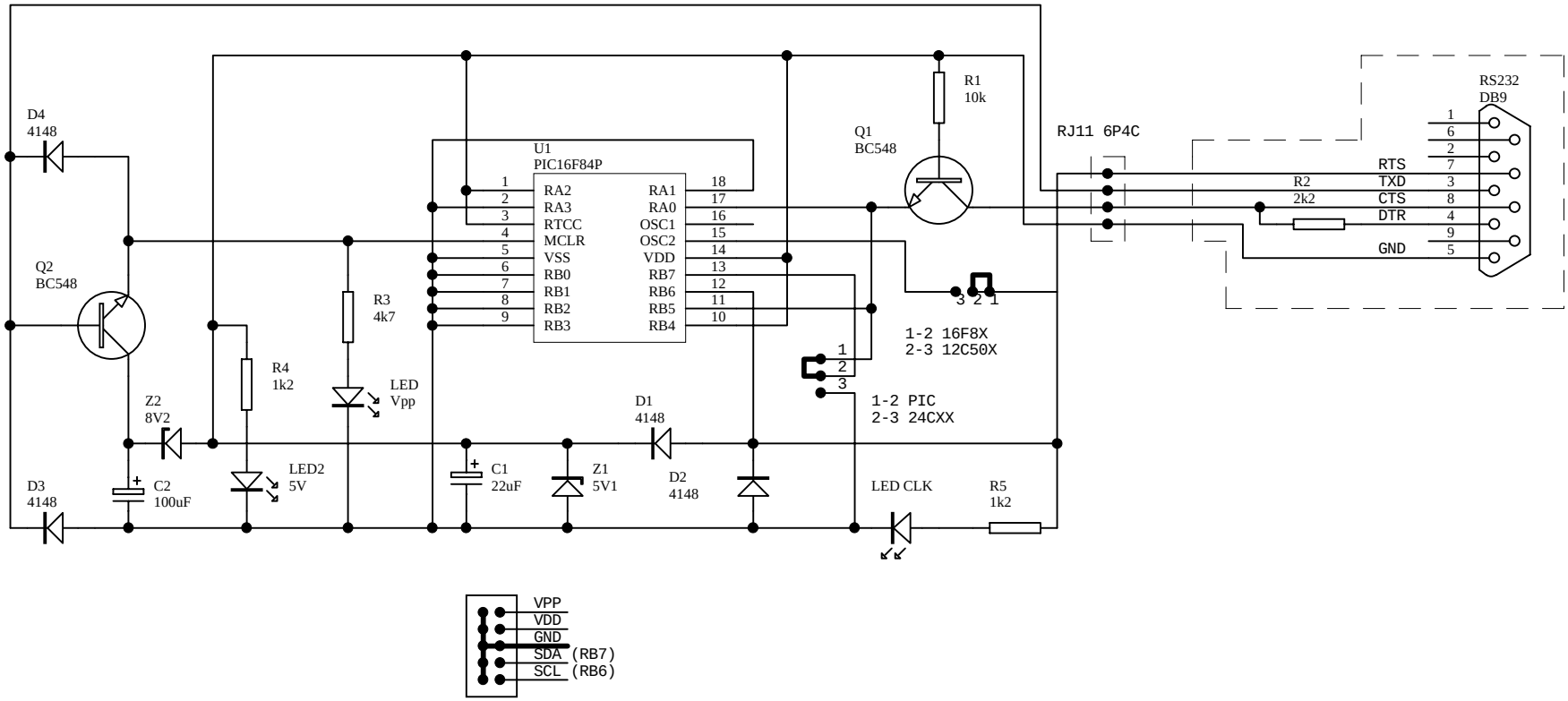

Title		
Size A4	Number	Revision
Date: 7-Jan-2002		Sheet of
File: C:\CAD\SCH\JDM2001.SCH		Drawn By: